DS-1707ZJ

Wall Mount

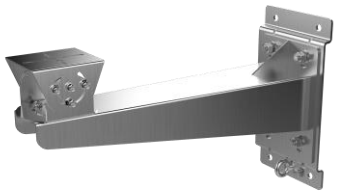

Features

- Adopts the stainless steel structure
- Applied to both indoor conditions, and outdoor conditions

Dimension

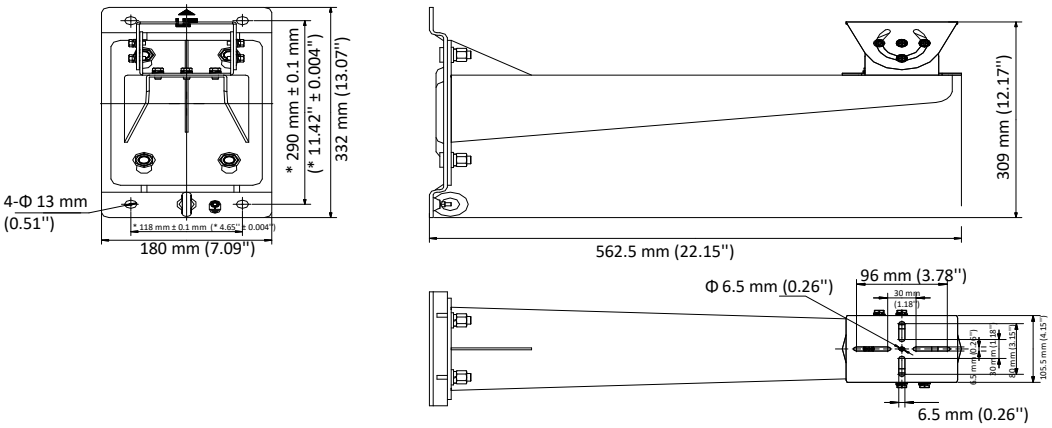

Available Model

DS-1707ZJ

Parameter

Model / Parameters	DS-1707ZJ
	Wall Mount
Appearance	Unpainted Stainless Steel
Material	SUS304
Dimension	562.5 mm × 180 mm × 309 mm (22.15" × 7.09" × 12.17")
Weight	7.02 kg (15.48 lb.)

Notes

- The mount should be installed on the flat surface.
- Waterproof rubber is necessary for the outdoor application.
- The wall should be capable of supporting at least 3 times as much as the total weight of the camera, and the mount.
- The maximum load capacity of the mount is 20 kg (44.09 lb.).